CARMEN-EROICA-IRIS-NORMA-TOSCA

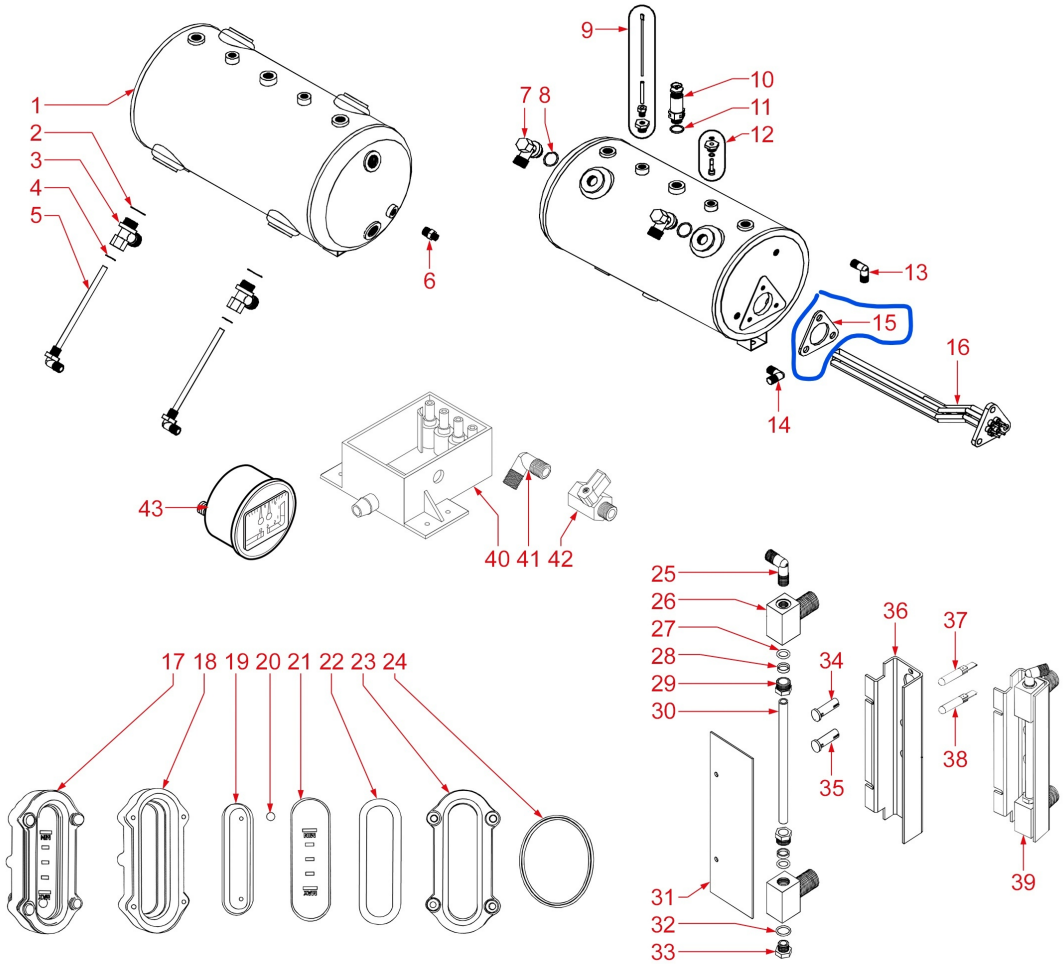

3/4	3/4 2000 mm		5m 12x18	100	C P	3/4-PP 100 cm	200	C P	3/8-CP 30 cm	300	C P	3/4-PP 100 cm	400
			30m 12x18	101		3/4-PP 150 cm	201		3/8-CP 50 cm	301		3/4-PP 150 cm	401
			5m 14x20	102		3/4-PP 200 cm	202		3/8-CP 80 cm	302		3/4-PP 200 cm	402
			30m 14x20	103		3/8-PP 100 cm	203		3/8-CP 100 cm	303		3/4-PP 250 cm	403
			5m 16x23	104		3/8-PP 150 cm	204		3/8-CP 120 cm	304		3/8-PP 37 cm	404
			30m 16x23	105		3/8-PP 200 cm	205		3/8-CP 150 cm	305		3/8-PP 200 cm	405
			5m 18x25	106		3/8-CC 50 cm	206		1/8-PP 30 cm	306		3/8-CC 50 cm	406
			30m 18x25	107		3/8-CC 75 cm	207		1/8-PP 60 cm	307		3/8-CC 100 cm	407
			5m 20x27	108		3/8-CC 100 cm	208		1/8-CC 37 cm	308		3/8-CC 150 cm	408
			30m 20x27	109		3/8-CC 150 cm	209		1/8-CC 150 cm	309			409
50	51												